Lecture: Benchmarks, Pipelining Intro

- Topics: Performance equations wrap-up,
  Intro to pipelining

Measuring Performance

- Two primary metrics: wall clock time (response time for a program) and throughput (jobs performed in unit time)
- To optimize throughput, must ensure that there is minimal waste of resources

Benchmark Suites

- Performance is measured with benchmark suites: a collection of programs that are likely relevant to the user
  - SPEC CPU 2006: cpu-oriented programs (for desktops)
  - SPECweb, TPC: throughput-oriented (for servers)
  - EEMBC: for embedded processors/workloads

Summarizing Performance

- Consider 25 programs from a benchmark set – how do we capture the behavior of all 25 programs with a single number?

	P1	P2	P3
Sys-A	10	8	25
Sys-B	12	9	20
Sys-C	8	8	30

  - Sum of execution times (AM)
  - Sum of weighted execution times (AM)
  - Geometric mean of execution times (GM)

Sum of Weighted Exec Times – Example

- We fixed a reference machine X and ran 4 programs A, B, C, D on it such that each program ran for 1 second

- The exact same workload (the four programs execute the same number of instructions that they did on machine X) is run on a new machine Y and the execution times for each program are 0.8, 1.1, 0.5, 2

- With AM of normalized execution times, we can conclude that Y is 1.1 times slower than X – perhaps, not for all workloads, but definitely for one specific workload (where all programs run on the ref-machine for an equal #cycles)

GM Example

	Computer-A	Computer-B	Computer-C
P1	1 sec	10 secs	20 secs
P2	1000 secs	100 secs	20 secs

Conclusion with GMs: (i) A=B
(ii) C is ~1.6 times faster

- For (i) to be true, P1 must occur 100 times for every occurrence of P2
- With the above assumption, (ii) is no longer true

Hence, GM can lead to inconsistencies

Problem 4

- Consider 3 programs from a benchmark set. Assume that system-A is the reference machine. How does the performance of system-C compare against that of system-B (for all 3 metrics)?

	P1	P2	P3
Sys-A	5	10	20
Sys-B	6	8	18
Sys-C	7	9	14

  - Sum of execution times (AM)
  - Sum of weighted execution times (AM)
  - Geometric mean of execution times (GM)

Problem 4

- Consider 3 programs from a benchmark set. Assume that system-A is the reference machine. How does the performance of system-C compare against that of system-B (for all 3 metrics)?

	P1	P2	P3	S.E.T	S.W.E.T	GM
Sys-A	5	10	20	35	3	10
Sys-B	6	8	18	32	2.9	9.5
Sys-C	7	9	14	30	3	9.6

  - Relative to B, C provides a speedup of 0.97 (S.W.E.T) or 0.99 (GM) or 1.07 (S.E.T)
  - Relative to B, C improves execution time by -3.3% (S.W.E.T) or -1% (GM) or 6.7% (S.E.T)

Summarizing Performance

- GM: does not require a reference machine, but does not predict performance very well
  - So we multiplied execution times and determined that sys-A is 1.2x faster…but on what workload?

- AM: does predict performance for a specific workload, but that workload was determined by executing programs on a reference machine
  - Every year or so, the reference machine will have to be updated

Speedup Vs. Percentage

- "Speedup" is a ratio = old exec time / new exec time

- "Improvement", "Increase", "Decrease" usually refer to percentage relative to the baseline
  = (new perf – old perf) / old perf

- A program ran in 100 seconds on my old laptop and in 70 seconds on my new laptop
  - What is the speedup? (1/70) / (1/100) = 1.42
  - What is the percentage increase in performance?
    (1/70 – 1/100) / (1/100) = 42%
  - What is the reduction in execution time? 30%

CPU Performance Equation

- Clock cycle time = 1 / clock speed

- CPU time = clock cycle time x cycles per instruction x number of instructions

- Influencing factors for each:
  - clock cycle time: technology and pipeline
  - CPI: architecture and instruction set design
  - instruction count: instruction set design and compiler

- CPI (cycles per instruction) or IPC (instructions per cycle) can not be accurately estimated analytically

Problem 5

- My new laptop has an IPC that is 20% worse than my old laptop. It has a clock speed that is 30% higher than the old laptop. I'm running the same binaries on both machines. What speedup is my new laptop providing?

Problem 5

- My new laptop has an IPC that is 20% worse than my old laptop. It has a clock speed that is 30% higher than the old laptop. I'm running the same binaries on both machines. What speedup is my new laptop providing?

Exec time = cycle time * CPI * instrs
Perf = clock speed * IPC / instrs
Speedup = new perf / old perf
= new clock speed * new IPC / old clock speed * old IPC
= 1.3 * 0.8 = 1.04

An Alternative Perspective - I

- Each program is assumed to run for an equal number of cycles, so we're fair to each program

- The number of instructions executed per cycle is a measure of how well a program is doing on a system

- The appropriate summary measure is sum of IPCs or AM of IPCs = $\frac{1.2 \text{ instr}}{\text{cyc}} + \frac{1.8 \text{ instr}}{\text{cyc}} + \frac{0.5 \text{ instr}}{\text{cyc}}$

- This measure implicitly assumes that 1 instr in prog-A has the same importance as 1 instr in prog-B

An Alternative Perspective - II

- Each program is assumed to run for an equal number of instructions, so we're fair to each program

- The number of cycles required per instruction is a measure of how well a program is doing on a system

- The appropriate summary measure is sum of CPIs or AM of CPIs = $\frac{0.8 \text{ cyc}}{\text{instr}} + \frac{0.6 \text{ cyc}}{\text{instr}} + \frac{2.0 \text{ cyc}}{\text{instr}}$

- This measure implicitly assumes that 1 instr in prog-A has the same importance as 1 instr in prog-B

AM and HM

- Note that AM of IPCs = 1 / HM of CPIs and
  AM of CPIs = 1 / HM of IPCs

- So if the programs in a benchmark suite are weighted such that each runs for an equal number of cycles, then AM of IPCs or HM of CPIs are both appropriate measures

- If the programs in a benchmark suite are weighted such that each runs for an equal number of instructions, then AM of CPIs or HM of IPCs are both appropriate measures

AM vs. GM

- GM of IPCs = 1 / GM of CPIs
- AM of IPCs represents thruput for a workload where each program runs sequentially for 1 cycle each; but high-IPC programs contribute more to the AM
- GM of IPCs does not represent run-time for any real workload (what does it mean to multiply instructions?); but every program's IPC contributes equally to the final measure

Problem 6

- My new laptop has a clock speed that is 30% higher than the old laptop. I'm running the same binaries on both machines. Their IPCs are listed below. I run the binaries such that each binary gets an equal share of CPU time. What speedup is my new laptop providing?

	P1	P2	P3
Old-IPC	1.2	1.6	2.0
New-IPC	1.6	1.6	1.6

Problem 6

- My new laptop has a clock speed that is 30% higher than the old laptop. I'm running the same binaries on both machines. Their IPCs are listed below. I run the binaries such that each binary gets an equal share of CPU time. What speedup is my new laptop providing?

	P1	P2	P3	AM	GM
Old-IPC	1.2	1.6	2.0	1.6	1.57
New-IPC	1.6	1.6	1.6	1.6	1.6

AM of IPCs is the right measure. Could have also used GM. Speedup with AM would be 1.3.

Building a Car

Unpipelined

Start and finish a job before moving to the next

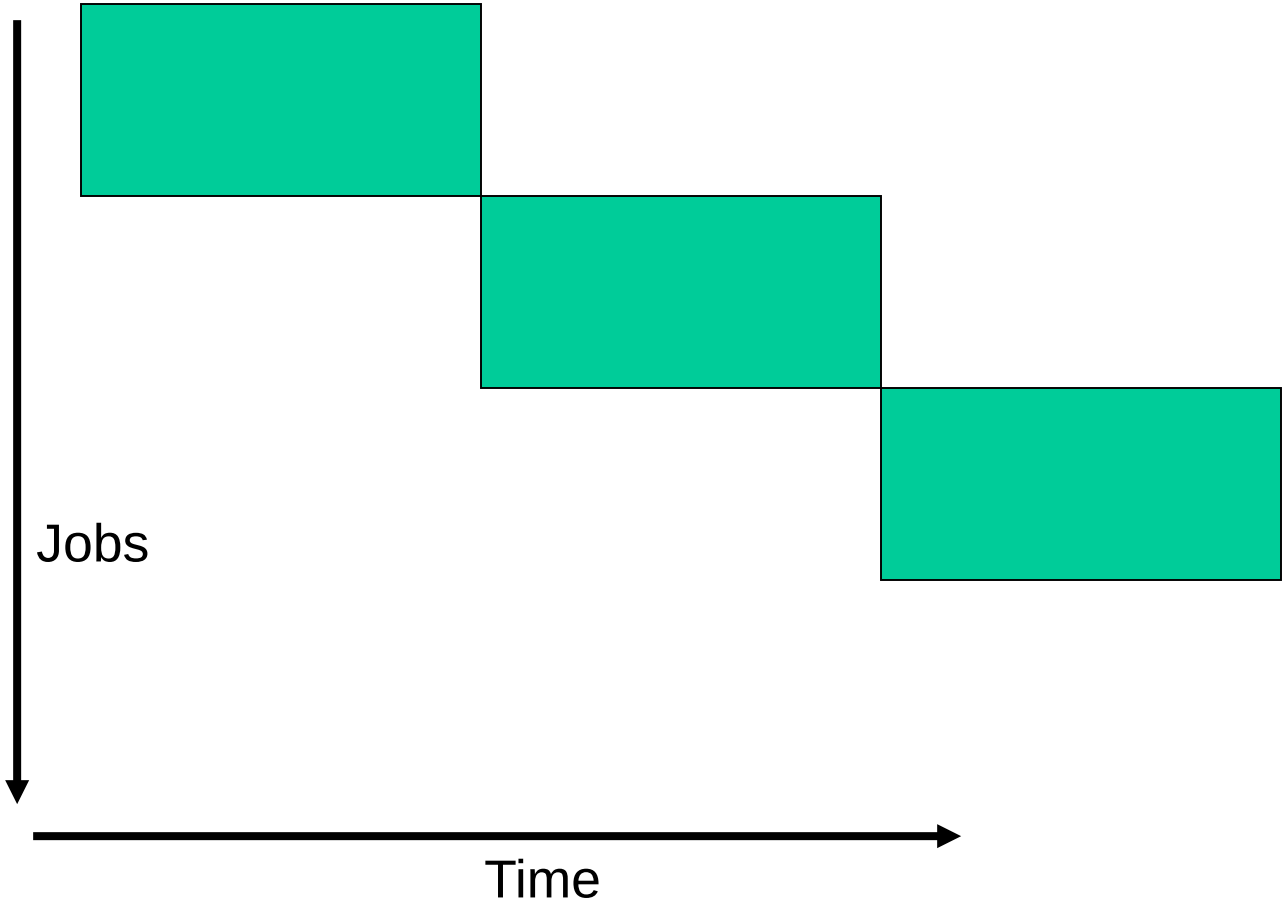

The Assembly Line

Pipelined

Break the job into smaller stages

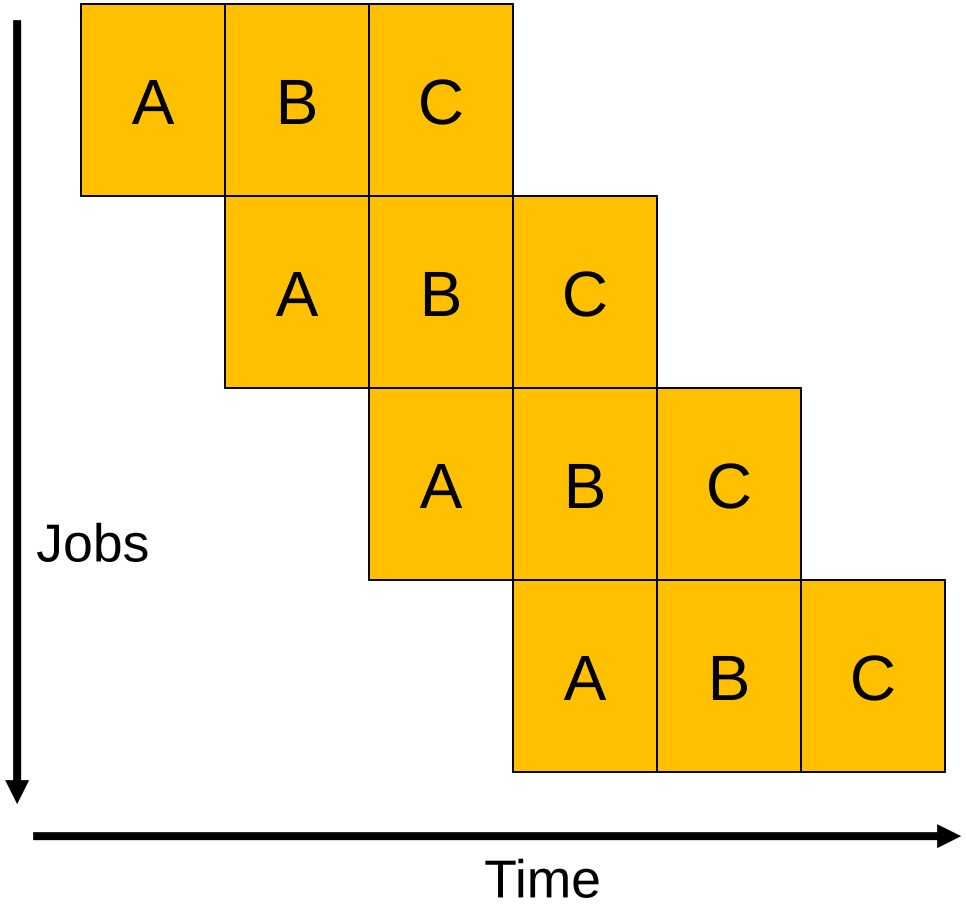

Clocks and Latches

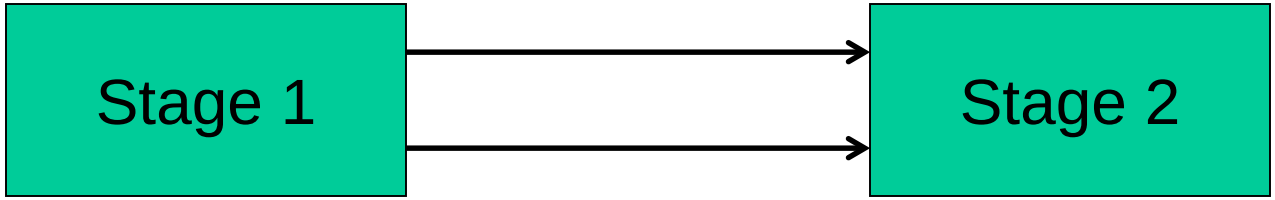

Clocks and Latches

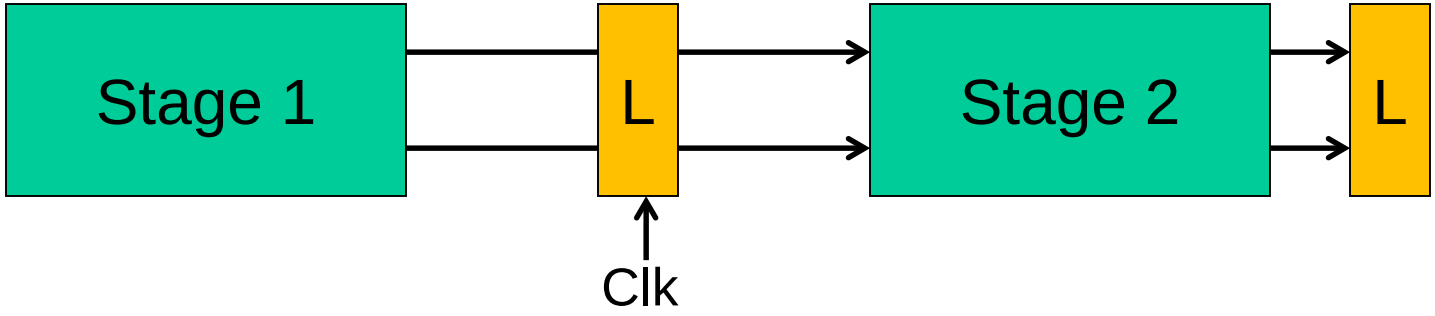

Title

- Bullet