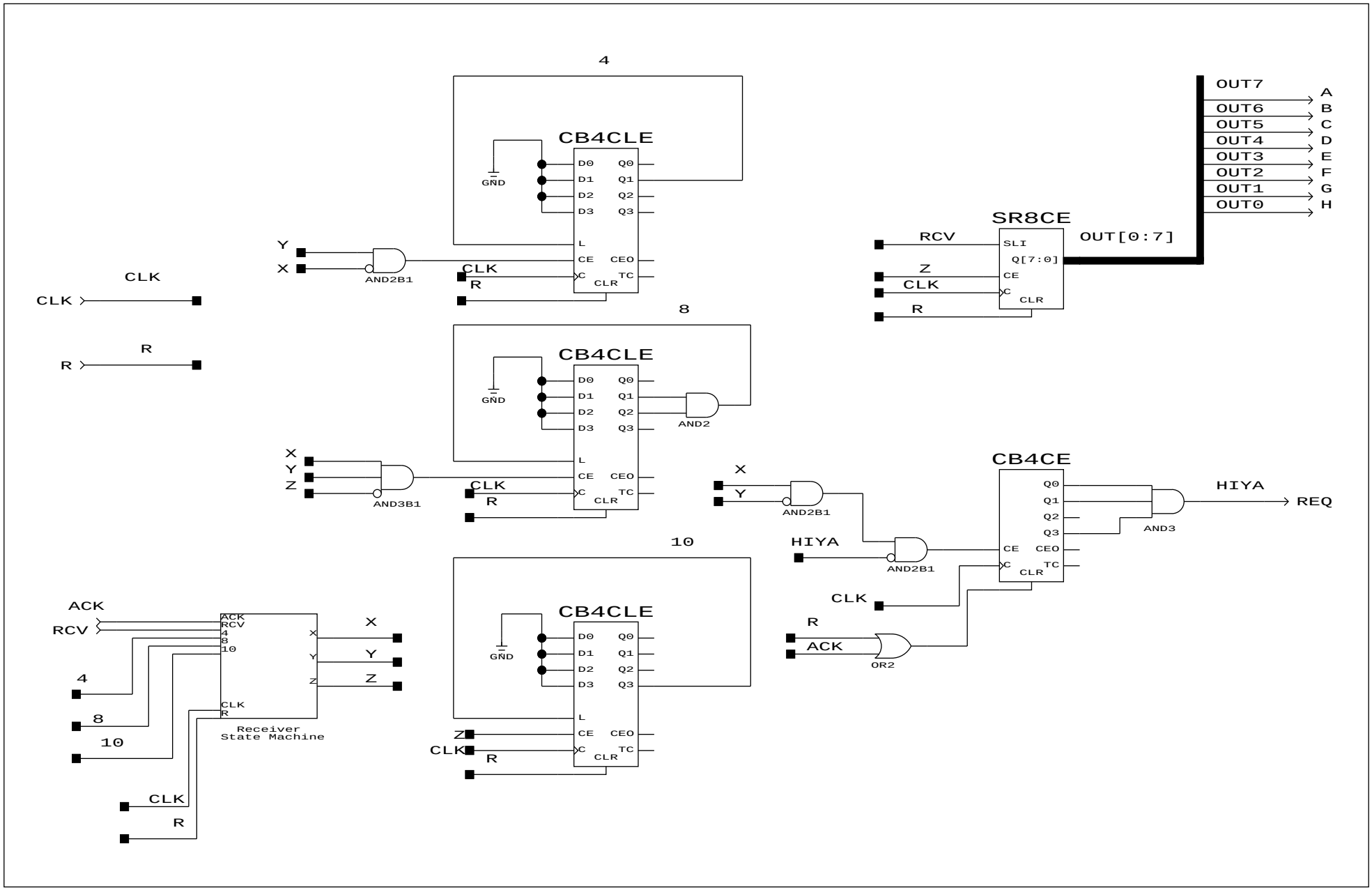
4
CB4CLE
GND
D0
D1
D2
D3
Q0
Q1
Q2
Q3
L
CE
CEO
C
TC
CLR
Y
X
AND2B1
CLK
R
CLK
CLK
R
R
8
CB4CLE
GND
AND2
X
Y
Z
AND3B1
CLK
R
10
CB4CLE
GND
Z
CLK
R
ACK
RCV
4
8
10
CLK
R
X
Y
Z
Receiver
State Machine
4
8
10
CLK
R
OUT7
OUT6
OUT5
OUT4
OUT3
OUT2
OUT1
OUT0
A
B
C
D
E
F
G
H
SR8CE
RCV
SLI
Q[7:0]
OUT[0:7]
Z
CE
CLK
C
CLR
R
X
Y
AND2B1
CB4CE
Q0
Q1
Q2
Q3
HIYA
REQ
AND3
HIYA
AND2B1
CE
CEO
C
TC
CLR
CLK
R
ACK
OR2